2-6-10 Dimensions for HIWIN QH Series

(1) QHH-CA / QHH-HA

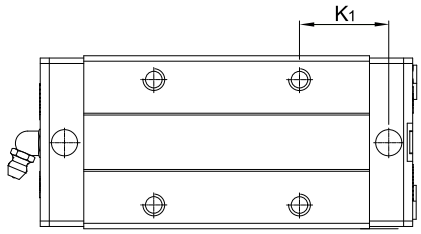

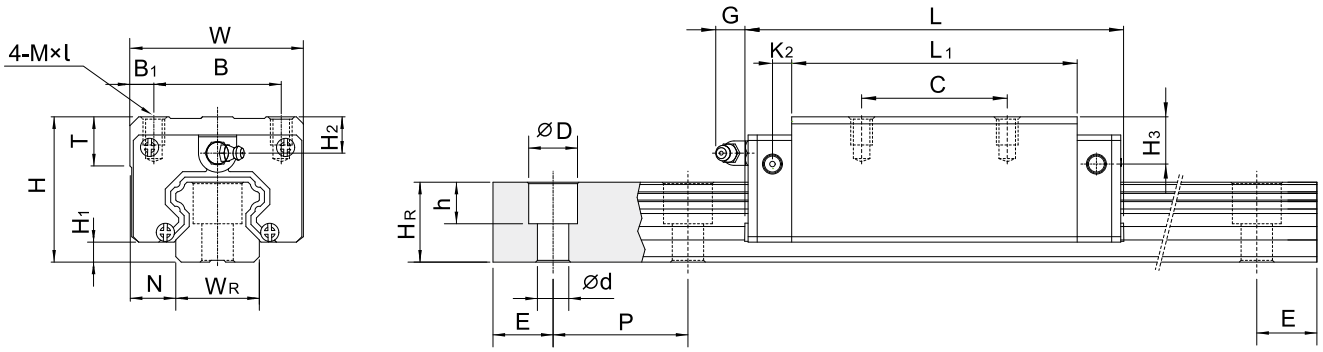

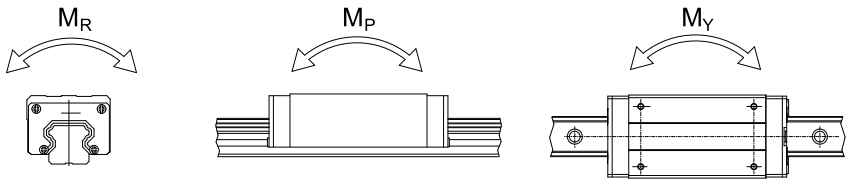

Model No.	Dimensions of Assembly (mm)			Dimensions of Block (mm)													Dimensions of Rail (mm)							Mounting Bolt for Rail	Basic Dynamic Load Rating	Basic Static Load Rating	Static Rated Moment			Weight	
	H	H_1	N	W	B	B_1	C	L_1	L	K_1	K_2	G	Mxl	T	H_2	H_3	W_R	H_R	D	h	d	P	E	(mm)	C(kN)	C_0 (kN)	M_R kN-m	M_P kN-m	M_Y kN-m	Block kg	Rail kg/m
QHH15CA	28	4	9.5	34	26	4	26	39.4	61.4	10	5	5.3	M4 x 5	6	7.95	8.2	15	15	7.5	5.3	4.5	60	20	M4x16	13.88	14.36	0.10	0.08	0.08	0.18	1.45
QHH20CA	30	4.6	12	44	32	6	36	50.5	76.7	11.75	6	12	M5 x 6	8	6	6	20	17.5	9.5	8.5	6	60	20	M5x16	23.08	25.63	0.26	0.19	0.19	0.29	2.21
QHH20HA							50	65.2	91.4	12.1															27.53	31.67	0.31	0.27	0.27	0.38	
QHH25CA	40	5.5	12.5	48	35	6.5	35	58	83.4	15.7	6	12	M6 x8	8	10	9	23	22	11	9	7	60	20	M6x20	31.78	33.68	0.39	0.31	0.31	0.50	3.21
QHH25HA							50	78.6	104	18.5															39.30	43.62	0.50	0.45	0.45	0.68	
QHH30CA	45	6	16	60	40	10	40	70	97.4	19.5	6.25	12	M8x10	8.5	9.5	9	28	26	14	12	9	80	20	M8x25	46.49	48.17	0.60	0.5	0.50	0.87	4.47
QHH30HA							60	93	120.4	21.75															56.72	65.09	0.83	0.89	0.89	1.15	
QHH35CA	55	7.5	18	70	50	10	50	80	113.6	19	7.5	12	M8x12	10.2	15.5	13.5	34	29	14	12	9	80	20	M8x25	60.52	63.84	1.07	0.76	0.76	1.44	6.30
QHH35HA							72	105.8	139.4	20.9															73.59	86.24	1.45	1.33	1.33	1.90	
QHH45CA	70	9.2	20.5	86	60	13	60	97	139.4	23	10	12.9	M10x17	16	18.5	20	45	38	20	17	14	105	22.5	M12×35	89.21	94.81	1.83	1.38	1.38	2.72	10.41
QHH45HA							80	128.8	171.2	29.09															108.72	128.43	2.47	2.41	2.41	3.59	

Note : 1 kgf = 9.81 N