Model Number for KA136

KA136	-20	P	-1050	A	F0	U	S1	M
Model	Lead	Precision Grade	Effective Stroke	Slider Type	Motor Flange	Cover	Limit Switch	Motor
	5 mm 10 mm 20 mm	C: Normal P: Precision		A: Standard	F0 : Direct	U: Without Cover None : Standard Cover	S1: OMRON SX671 S2: OMRON SX674 S3: SUNX GX-F12A S4: SUNX GX-F12A-P None: Without Sensor	M: Supplied With Motor None: Without Motor

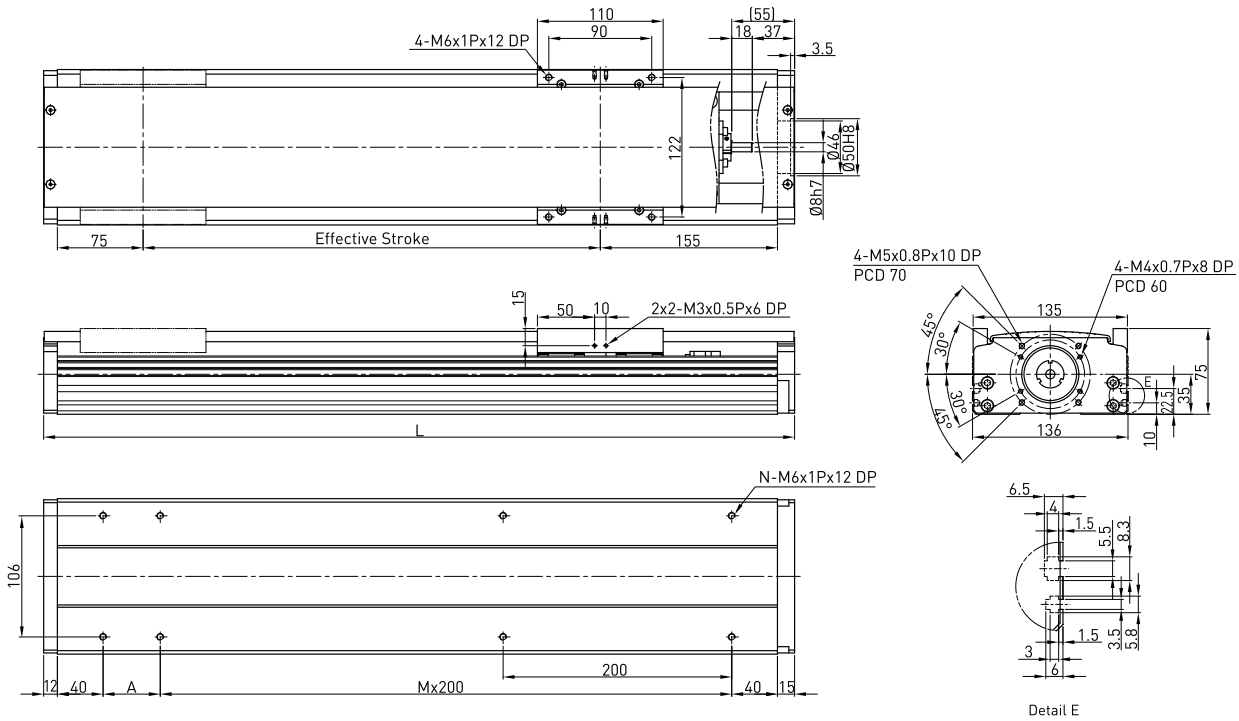

Effective stroke (mm)	L	A	M	N	Weight (kg)
100	357	50	1	6	6.19
150	407	100	1	6	6.74
200	457	150	1	6	7.29
250	507	200	1	6	7.84
300	557	50	2	8	8.39
350	607	100	2	8	8.94
400	657	150	2	8	9.49
450	707	200	2	8	10.05
500	757	50	3	10	10.6
550	807	100	3	10	11.15
600	857	150	3	10	11.7
650	907	200	3	10	12.25
700	957	50	4	12	12.8
750	1007	100	4	12	13.35
800	1057	150	4	12	13.9
850	1107	200	4	12	14.45
900	1157	50	5	14	15
950	1207	100	5	14	15.55
1000	1257	150	5	14	16.1
1050	1307	200	5	14	16.65

AC motor output	W	200		
Drive		Ballscrew C7(normal)		
Lead	mm	5	10	20
Rated RPM	RPM	3000	3000	3000
Max linear speed*	mm/sec	250	500	1000
Rated thrust	N	560	280	140
Repeatability	mm	±0.02		
Effective stroke	mm	100~1050		
Max load (H)	kg	95	64	32
Rated dynamic load**				
Fyd	N	50	50	50
Fzd	N	950	640	320
Mxd	N-m	20	24	28
Myd	N-m	26	30	35
Mzd	N-m	8	10	13

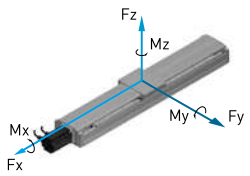

Permitted load condition***

$$\frac{Fy}{Fyd}+\frac{Fz}{Fzd}+\frac{Mx}{Mxd}+\frac{My}{Myd}+\frac{Mz}{Mzd}\leq 1$$

Fy, Fz, Mx, My, Mz are working loads

* Vibration might occur when the effective stroke is longer than 700mm.
The maximum speed should be decreased by 15% for every 100mm of increased stroke.
** The load condition is based on 10,000km operation.
*** If used on the vertical axis or in a special condition, please contact HIWIN.

Model Number for KA136-FD

KA136	-20	P	-1050	A	FD	U	S1	M
Model	Lead	Precision Grade	Effective Stroke	Slider Type	Motor Flange	Cover	Limit Switch	Motor
	5 mm 10 mm 20 mm	C: Normal P: Precision		A: Standard	FD: Bottom	U: Without Cover None : Standard Cover	S1: OMRON SX671 S2: OMRON SX674 S3: SUNX GX-F12A S4: SUNX GX-F12A-P None: Without Sensor	M: Supplied With Motor None: Without Motor

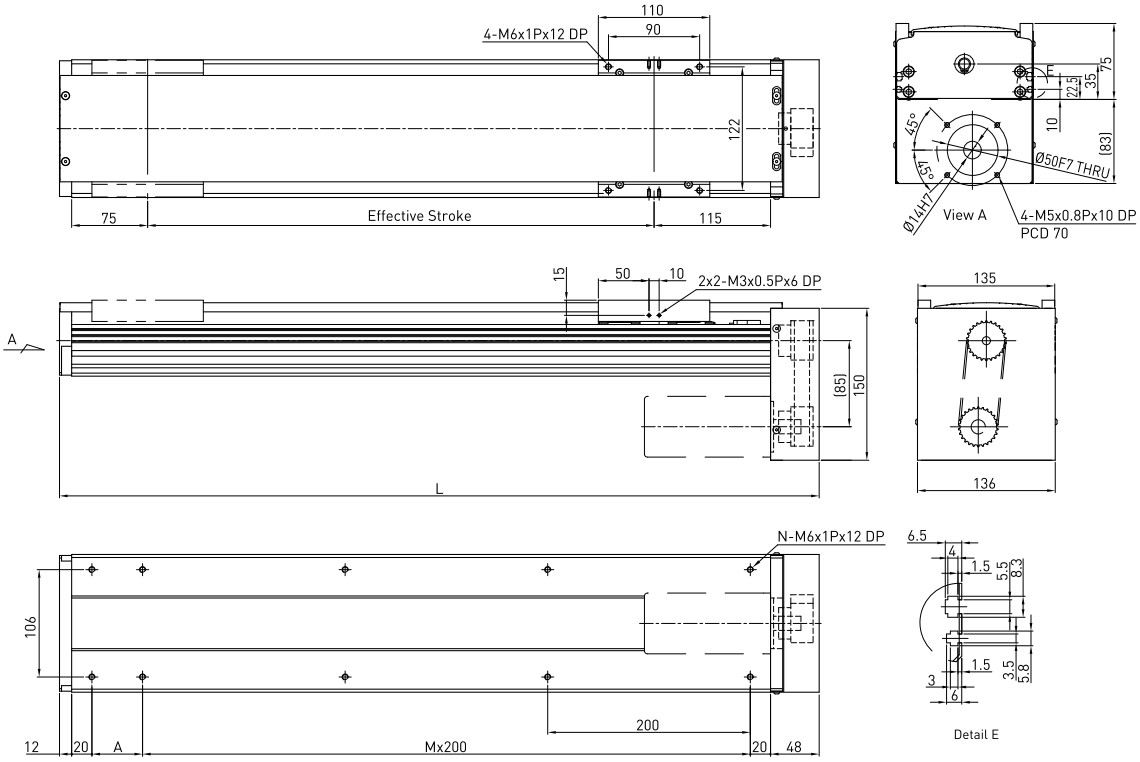

Effective stroke (mm)	L	A	M	N	Weight (kg)
100	350	50	1	6	6.31
150	400	100	1	6	6.88
200	450	150	1	6	7.44
250	500	200	1	6	8.01
300	550	50	2	8	8.56
350	600	100	2	8	9.12
400	650	150	2	8	9.68
450	700	200	2	8	10.25
500	750	50	3	10	10.81
550	800	100	3	10	11.37
600	850	150	3	10	11.94
650	900	200	3	10	12.51
700	950	50	4	12	13.06
750	1000	100	4	12	13.62
800	1050	150	4	12	14.18
850	1100	200	4	12	14.74
900	1150	50	5	14	15.3
950	1200	100	5	14	15.86
1000	1250	150	5	14	16.42
1050	1300	200	5	14	16.98

AC motor output		W	200		
Drive			Ballscrew C7(normal)		
Lead		mm	5	10	20
Rated RPM		RPM	3000	3000	3000
Max linear speed*		mm/sec	250	500	1000
Rated thrust		N	560	280	140
Repeatability		mm	±0.02		
Effective stroke		mm	100~1050		
Max load (H)		kg	95	64	32
Rated dynamic load**	Fyd	N	50	50	50
	Fzd	N	950	640	320
	Mxd	N-m	20	24	28
	Myd	N-m	26	30	35
	Mzd	N-m	8	10	13

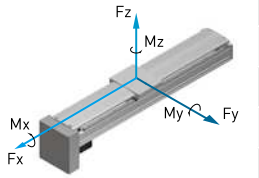

Permitted load condition***

$$\frac{Fy}{Fyd}+\frac{Fz}{Fzd}+\frac{Mx}{Mxd}+\frac{My}{Myd}+\frac{Mz}{Mzd}\leq 1$$

Fy, Fz, Mx, My, Mz are working loads

* Vibration might occur when the effective stroke is longer than 700mm.
The maximum speed should be decreased by 15% for every 100mm of increased stroke.
** The load condition is based on 10,000km operation.
*** If used on the vertical axis or in a special condition, please contact HIWIN.

Model Number for KA136-FI

KA136	-20	P	-1050	A	FI	U	S1	M
Model	Lead	Precision Grade	Effective Stroke	Slider Type	Motor Flange	Cover	Limit Switch	Motor
	5 mm 10 mm 20 mm	C: Normal P: Precision		A: Standard	FI : Internal	U: Without Cover None : Standard Cover	S1: OMRON SX671 S2: OMRON SX674 S3: SUNX GX-F12A S4: SUNX GX-F12A-P None: Without Sensor	M: Supplied With Motor None: Without Motor

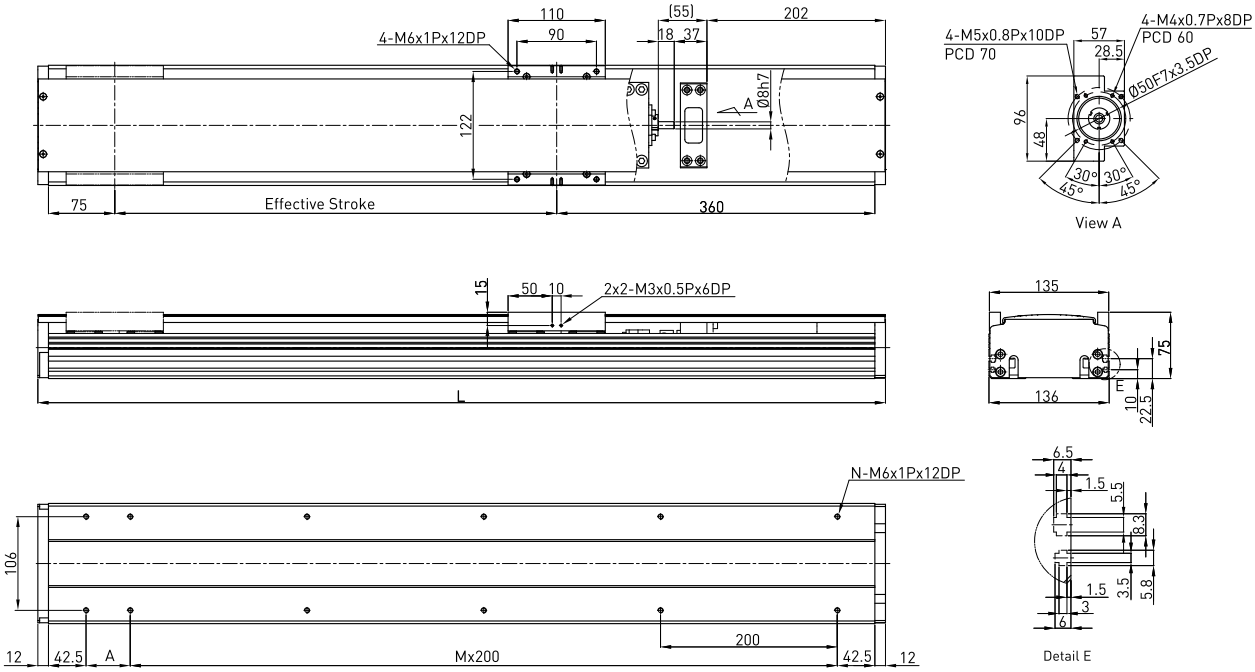

Effective stroke (mm)	L	A	M	N	Weight (kg)
100	559	50	2	8	6.62
150	609	100	2	8	7.21
200	659	150	2	8	7.8
250	709	200	2	8	8.39
300	759	50	3	10	8.98
350	809	100	3	10	9.57
400	859	150	3	10	10.15
450	909	200	3	10	10.75
500	959	50	4	12	11.34
550	1009	100	4	12	11.93
600	1059	150	4	12	12.52
650	1109	200	4	12	13.11
700	1159	50	5	14	13.71
750	1209	100	5	14	14.29
800	1259	150	5	14	14.87
850	1309	200	5	14	15.46
900	1359	50	6	16	16.05
950	1409	100	6	16	16.64
1000	1459	150	6	16	17.23
1050	1509	200	6	16	17.82

AC motor output		W	200	
Drive			Ballscrew C7(normal)	
Lead		mm	5	10	20
Rated RPM		RPM	3000	3000	3000
Max linear speed*		mm/sec	250	500	1000
Rated thrust		N	560	280	140
Repeatability		mm	±0.02	
Effective stroke		mm	100~1050	
Max load (H)		kg	95	64	32
Rated dynamic load**	Fyd	N	50	50	50
	Fzd	N	950	640	320
	Mxd	N-m	20	24	28
	Myd	N-m	26	30	35
	Mzd	N-m	8	10	13

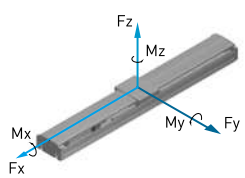

Permitted load condition* :**

$$\frac{Fy}{Fyd}+\frac{Fz}{Fzd}+\frac{Mx}{Mxd}+\frac{My}{Myd}+\frac{Mz}{Mzd}\leq 1$$

Fy, Fz, Mx, My, Mz are working loads

* Vibration might occur when the effective stroke is longer than 700mm.
The maximum speed should be decreased by 15% for every 100mm of increased stroke.
** The load condition is based on 10,000km operation.
*** If used on the vertical axis or in a special condition, please contact HIWIN.

Model Number for KA136-FL

KA136	-20	P	-1050	A	FL	U	S1	M
Model	Lead	Precision Grade	Effective Stroke	Slider Type	Motor Flange	Cover	Limit Switch	Motor
	5 mm 10 mm 20 mm	C: Normal P: Precision		A: Standard	FL: Left	U: Without Cover None : Standard Cover	S1: OMRON SX671 S2: OMRON SX674 S3: SUNX GX-F12A S4: SUNX GX-F12A-P None: Without Sensor	M: Supplied With Motor None: Without Motor

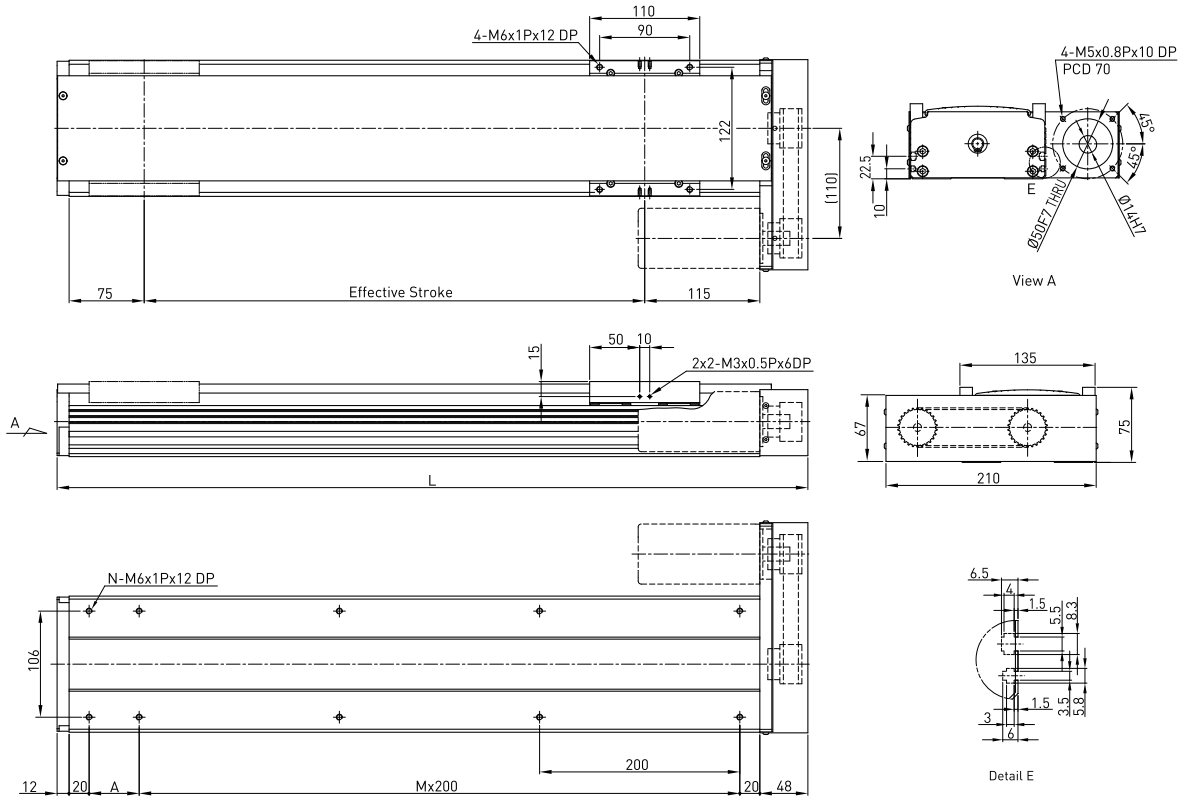

Effective stroke (mm)	L	A	M	N	Weight (kg)
100	350	50	1	6	6.31
150	400	100	1	6	6.88
200	450	150	1	6	7.44
250	500	200	1	6	8.01
300	550	50	2	8	8.56
350	600	100	2	8	9.12
400	650	150	2	8	9.68
450	700	200	2	8	10.25
500	750	50	3	10	10.81
550	800	100	3	10	11.37
600	850	150	3	10	11.94
650	900	200	3	10	12.51
700	950	50	4	12	13.06
750	1000	100	4	12	13.62
800	1050	150	4	12	14.18
850	1100	200	4	12	14.74
900	1150	50	5	14	15.3
950	1200	100	5	14	15.86
1000	1250	150	5	14	16.42
1050	1300	200	5	14	16.98

AC motor output		W	200		
Drive			Ballscrew C7(normal)		
Lead		mm	5	10	20
Rated RPM		RPM	3000	3000	3000
Max linear speed*		mm/sec	250	500	1000
Rated thrust		N	560	280	140
Repeatability		mm	±0.02		
Effective stroke		mm	100~1050		
Max load (H)		kg	95	64	32
Rated dynamic load**	Fyd	N	50	50	50
	Fzd	N	950	640	320
	Mxd	N-m	20	24	28
	Myd	N-m	26	30	35
	Mzd	N-m	8	10	13

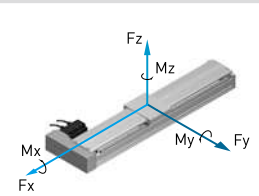

Permitted load condition* :

$$\frac{Fy}{Fyd}+\frac{Fz}{Fzd}+\frac{Mx}{Mxd}+\frac{My}{Myd}+\frac{Mz}{Mzd}\leq 1$$

Fy, Fz, Mx, My, Mz are working loads

* Vibration might occur when the effective stroke is longer than 700mm.
The maximum speed should be decreased by 15% for every 100mm of increased stroke.
** The load condition is based on 10,000km operation.
*** If used on the vertical axis or in a special condition, please contact HIWIN.

Model Number for KA136-FR

KA136	-20	P	-1050	A	FR	U	S1	M
Model	Lead	Precision Grade	Effective Stroke	Slider Type	Motor Flange	Cover	Limit Switch	Motor
	5 mm 10 mm 20 mm	C: Normal P: Precision		A: Standard	FR: Right	U: Without Cover None : Standard Cover	S1: OMRON SX671 S2: OMRON SX674 S3: SUNX GX-F12A S4: SUNX GX-F12A-P None: Without Sensor	M: Supplied With Motor None: Without Motor

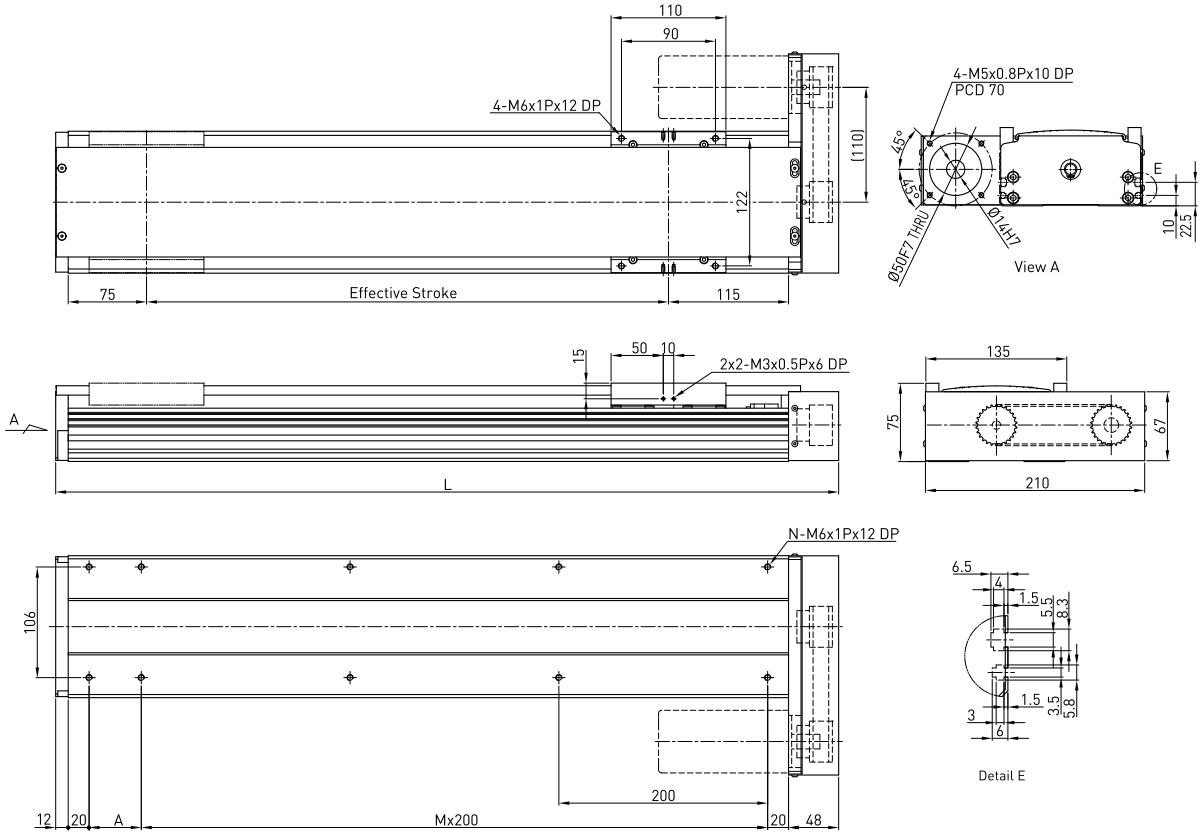

Effective stroke (mm)	L	A	M	N	Weight (kg)
100	350	50	1	6	6.31
150	400	100	1	6	6.88
200	450	150	1	6	7.44
250	500	200	1	6	8.01
300	550	50	2	8	8.56
350	600	100	2	8	9.12
400	650	150	2	8	9.68
450	700	200	2	8	10.25
500	750	50	3	10	10.81
550	800	100	3	10	11.37
600	850	150	3	10	11.94
650	900	200	3	10	12.51
700	950	50	4	12	13.06
750	1000	100	4	12	13.62
800	1050	150	4	12	14.18
850	1100	200	4	12	14.74
900	1150	50	5	14	15.3
950	1200	100	5	14	15.86
1000	1250	150	5	14	16.42
1050	1300	200	5	14	16.98

AC motor output		W	200	
Drive			Ballscrew C7(normal)	
Lead		mm	5	10	20
Rated RPM		RPM	3000	3000	3000
Max linear speed*		mm/sec	250	500	1000
Rated thrust		N	560	280	140
Repeatability		mm	±0.02	
Effective stroke		mm	100~1050	
Max load (H)		kg	95	64	32
Rated dynamic load**	Fyd	N	50	50	50
	Fzd	N	950	640	320
	Mxd	N-m	20	24	28
	Myd	N-m	26	30	35
	Mzd	N-m	8	10	13

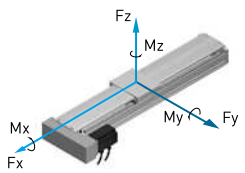

Permitted load condition***

$$\frac{Fy}{Fyd}+\frac{Fz}{Fzd}+\frac{Mx}{Mxd}+\frac{My}{Myd}+\frac{Mz}{Mzd}\leq 1$$

Fy, Fz, Mx, My, Mz are working loads

* Vibration might occur when the effective stroke is longer than 700mm.
The maximum speed should be decreased by 15% for every 100mm of increased stroke.
** The load condition is based on 10,000km operation.
*** If used on the vertical axis or in a special condition, please contact HIWIN.

Model Number for KA136B-FL

KA136	B	-120	C	-3000	A	FL	U	S1	M
Model	Timing Belt	Pulley Perimeter	Precision Grade	Effective Stroke	Slider Type	Motor Flange	Cover	Limit Switch	Motor
			C: Normal		A: Standard	FL: Left	U: Without Cover None : Standard Cover	S1: OMRON SX671 S2: OMRON SX674 S3: SUNX GX-F12A S4: SUNX GX-F12A-P None: Without Sensor	M: Supplied With Motor None: Without Motor

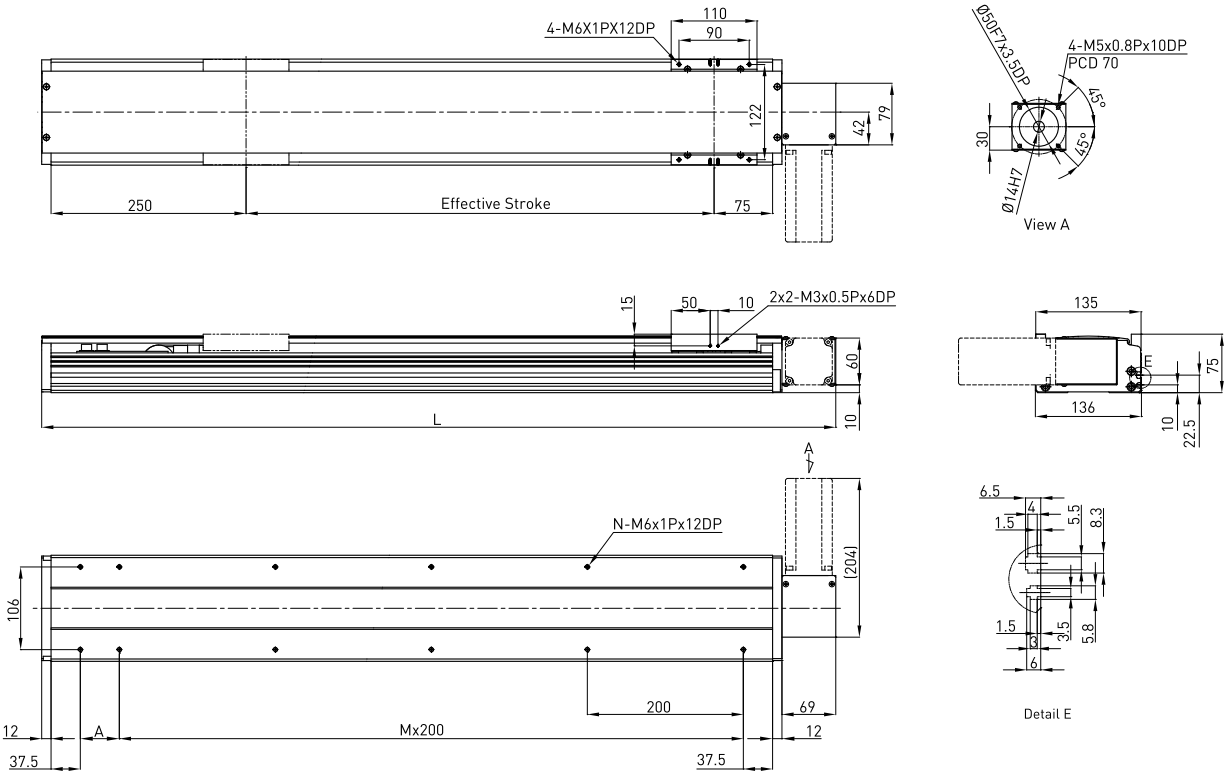

Effective stroke (mm)	L	A	M	N	Weight (kg)
200	618	50	2	8	6.97
400	818	50	3	10	8.93
600	1018	50	4	12	11.01
800	1218	50	5	14	12.97
1000	1418	50	6	16	14.93
1200	1618	50	7	18	16.99
1400	1818	50	8	20	18.95
1600	2018	50	9	22	21.01
1800	2218	50	10	24	22.97
2000	2418	50	11	26	24.93
2200	2618	50	12	28	26.99
2400	2818	50	13	30	28.95
2600	3018	50	14	32	31.01
2800	3218	50	15	34	32.97
3000	3418	50	16	36	34.93

AC motor output		W	200
Drive			Timing Belt
Pulley Perimeter		mm	120
Pulley RPM		RPM	900
Max linear speed		mm/sec	1800
Rated thrust		N	67
Repeatability		mm	±0.1
Effective stroke		mm	200~3000
Max load (H)		kg	15
Rated dynamic load*	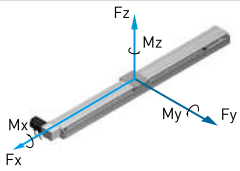	Fyd	N	50
		Fzd	N	150
		Mxd	N-m	42
		Myd	N-m	31
		Mzd	N-m	13
Permitted load condition**	$\frac{Fy}{Fyd}+\frac{Fz}{Fzd}+\frac{Mx}{Mxd}+\frac{My}{Myd}+\frac{Mz}{Mzd}\leq 1$ Fy, Fz, Mx, My, Mz are working loads		

*The load condition is based on 10,000km operation
**For horizontal application only. If used in special condition, please contact HIWIN.

Model Number for KA136B-FR

KA136	B	-120	C	-3000	A	FR	U	S1	M
Model	Timing Belt	Pulley Perimeter	Precision Grade	Effective Stroke	Slider Type	Motor Flange	Cover	Limit Switch	Motor
			C: Normal		A: Standard	FR: Right	U: Without Cover None : Standard Cover	S1: OMRON SX671 S2: OMRON SX674 S3: SUNX GX-F12A S4: SUNX GX-F12A-P None: Without Sensor	M: Supplied With Motor None: Without Motor

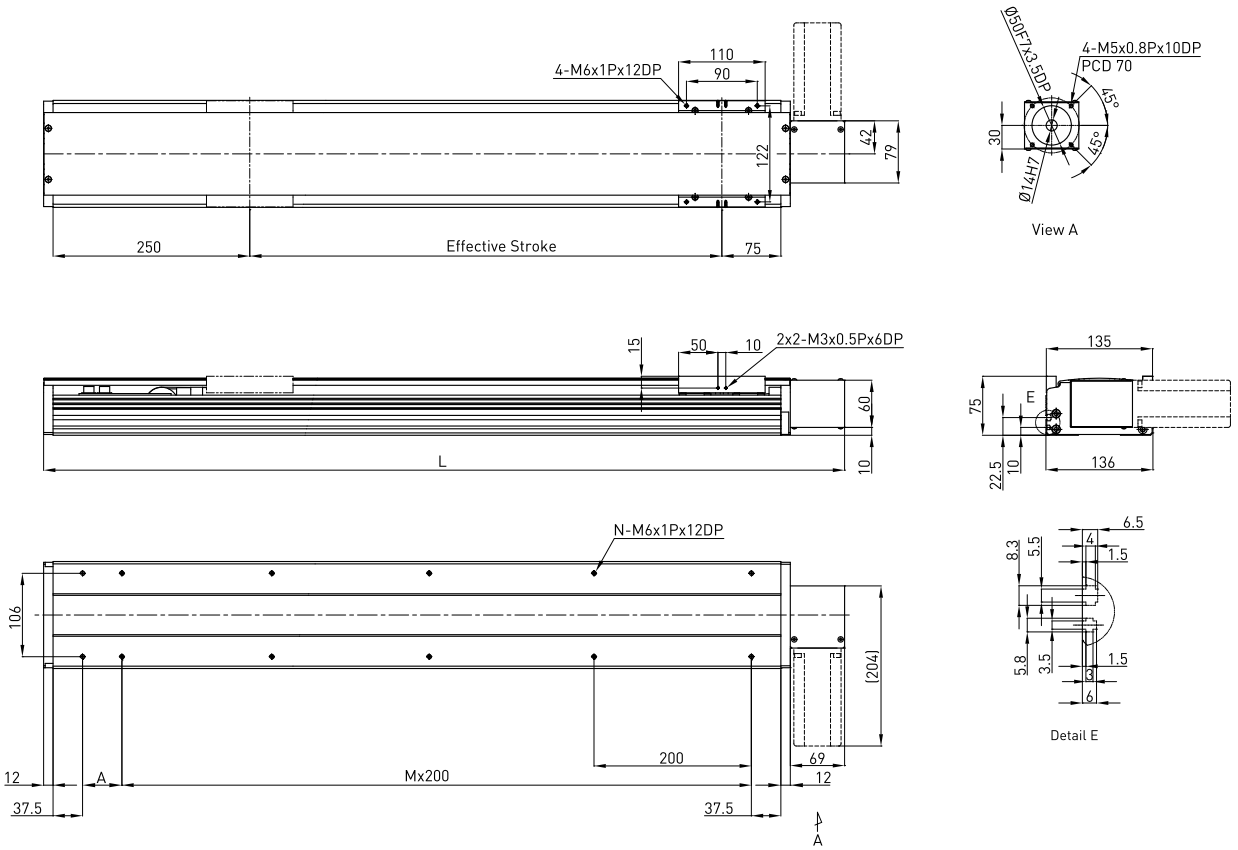

Effective stroke (mm)	L	A	M	N	Weight (kg)
200	618	50	2	8	6.97
400	818	50	3	10	8.93
600	1018	50	4	12	11.01
800	1218	50	5	14	12.97
1000	1418	50	6	16	14.93
1200	1618	50	7	18	16.99
1400	1818	50	8	20	18.95
1600	2018	50	9	22	21.01
1800	2218	50	10	24	22.97
2000	2418	50	11	26	24.93
2200	2618	50	12	28	26.99
2400	2818	50	13	30	28.95
2600	3018	50	14	32	31.01
2800	3218	50	15	34	32.97
3000	3418	50	16	36	34.93

AC motor output		W	200
Drive			Timing Belt
Pulley Perimeter		mm	120
Pulley RPM		RPM	900
Max linear speed		mm/sec	1800
Rated thrust		N	67
Repeatability		mm	±0.1
Effective stroke		mm	200~3000
Max load (H)		kg	15
Rated dynamic load*	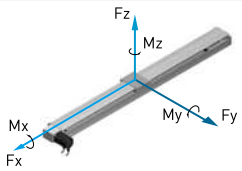	Fyd	N	50
		Fzd	N	150
		Mxd	N-m	42
		Myd	N-m	31
		Mzd	N-m	13
Permitted load condition**	$\frac{Fy}{Fyd}+\frac{Fz}{Fzd}+\frac{Mx}{Mxd}+\frac{My}{Myd}+\frac{Mz}{Mzd}\leq 1$ Fy, Fz, Mx, My, Mz are working loads		

*The load condition is based on 10,000km operation
**For horizontal application only. If used in special condition, please contact HIWIN.