Model Number for KA200

KA200	-25	P	-1250	A	F0	U	S1	M
Model	Lead	Precision Grade	Effective Stroke	Slider Type	Motor Flange	Cover	Limit Switch	Motor
	10mm 25mm	C: Normal P: Precision		A: Standard	F0 : Direct	U: Without Cover None : Standard Cover	S1: OMRON SX671 S2: OMRON SX674 S3: SUNX GX-F12A S4: SUNX GX-F12A-P None: Without Sensor	M: Supplied With Motor None: Without Motor

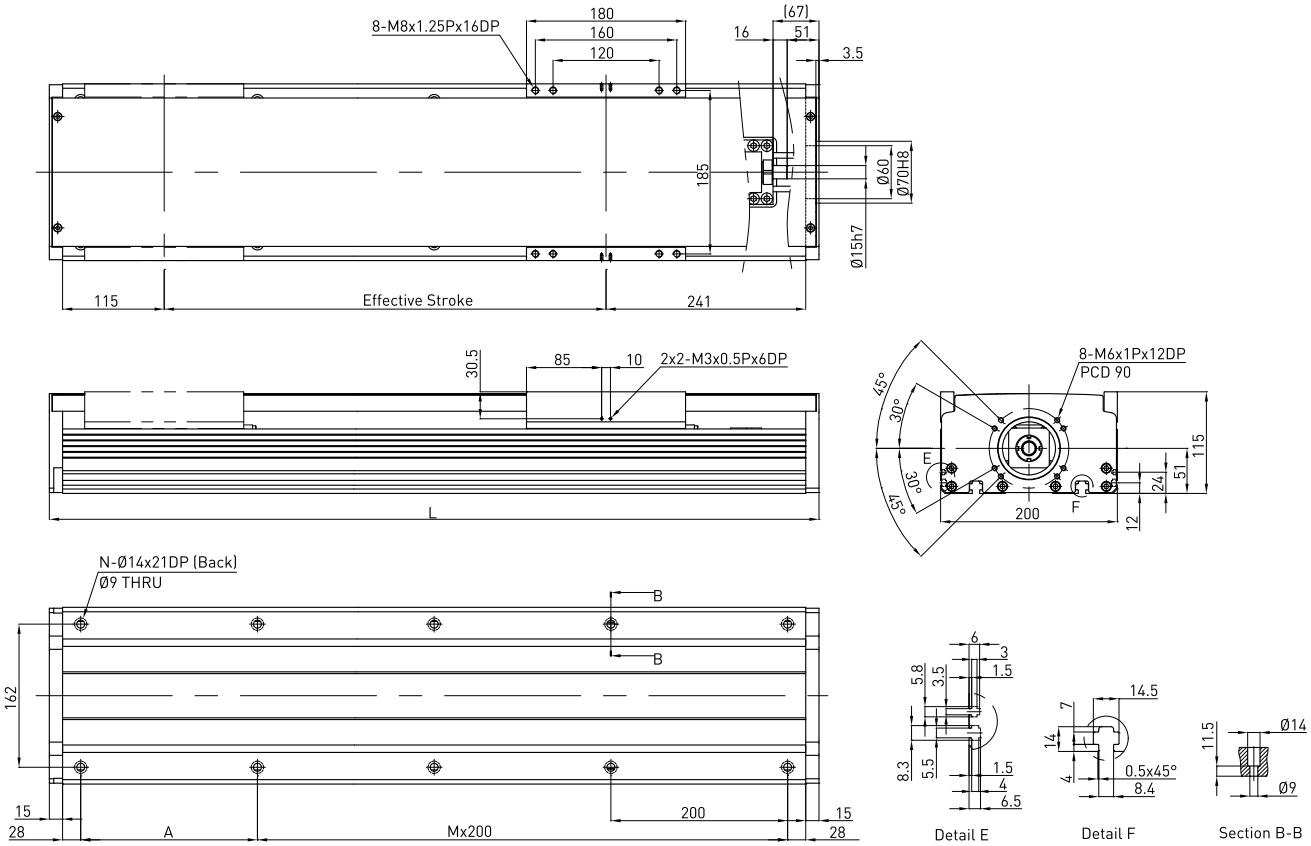

Effective stroke (mm)	L	A	M	N	Weight (kg)
150	536	50	2	8	17.66
200	586	100	2	8	18.99
250	636	150	2	8	20.32
300	686	200	2	8	21.65
350	736	50	3	10	22.98
400	786	100	3	10	24.31
450	836	150	3	10	25.64
500	886	200	3	10	26.97
550	936	50	4	12	28.3
600	986	100	4	12	29.63
650	1036	150	4	12	30.96
700	1086	200	4	12	32.29
750	1136	50	5	14	33.62
800	1186	100	5	14	34.95
850	1236	150	5	14	36.28
900	1286	200	5	14	37.61
950	1336	50	6	16	38.94
1000	1386	100	6	16	40.27
1050	1436	150	6	16	41.61
1100	1486	200	6	16	42.93
1150	1536	50	7	18	44.26
1200	1586	100	7	18	45.59
1250	1636	150	7	18	46.92

AC motor output		W	750	
Drive			Ballscrew C7(normal)	
Lead		mm	10	25
Rated RPM		RPM	3000	3000
Max linear speed*		mm/sec	500	1250
Rated thrust		N	1050	420
Repeatability		mm	±0.02	
Effective stroke		mm	150~1250	
Max load (H)		kg	239	95
Rated dynamic load**	Fyd	N	50	50
	Fzd	N	2390	950
	Mxd	N-m	154	178
	Myd	N-m	266	302
	Mzd	N-m	41	52
Permitted load condition***	$\frac{Fy}{Fyd}+\frac{Fz}{Fzd}+\frac{Mx}{Mxd}+\frac{My}{Myd}+\frac{Mz}{Mzd}\leq 1$ Fy, Fz, Mx, My, Mz are working loads			

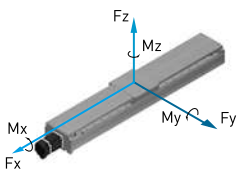

* Vibration might occur when the effective stroke is longer than 800mm.
The maximum speed should be decreased by 15% for every 100mm of increased stroke.
**The load condition is based on 10,000km operation
***For horizontal application only. If used in special condition, please contact HIWIN.

Model Number for KA200-FD

KA200	-25	P	-1250	A	FD	U	S1	M
Model	Lead	Precision Grade	Effective Stroke	Slider Type	Motor Flange	Cover	Limit Switch	Motor
	10mm 25mm	C: Normal P: Precision		A: Standard	FD: Bottom	U: Without Cover None : Standard Cover	S1: OMRON SX671 S2: OMRON SX674 S3: SUNX GX-F12A S4: SUNX GX-F12A-P None: Without Sensor	M: Supplied With Motor None: Without Motor

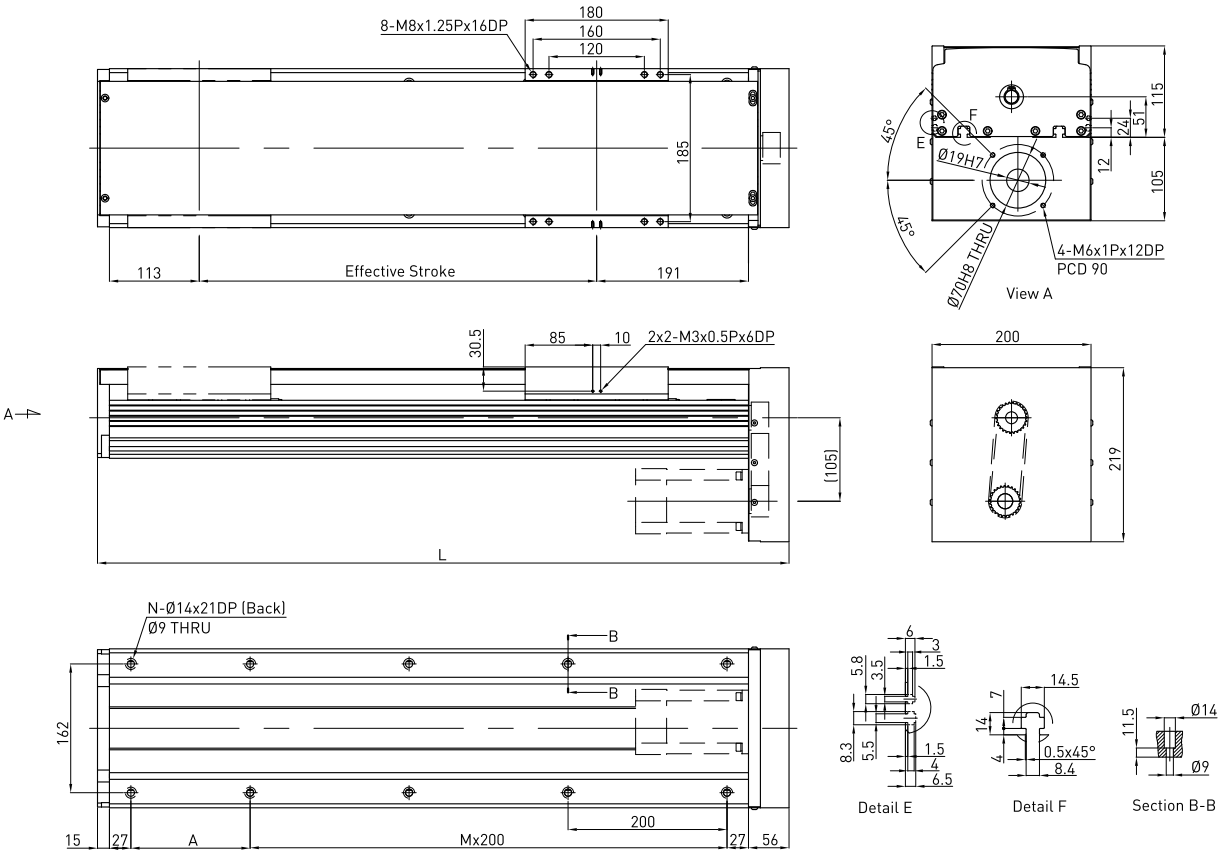

Effective stroke (mm)	L	A	M	N	Weight (kg)
150	525	200	1	6	18.46
200	575	50	2	8	19.79
250	625	100	2	8	21.12
300	675	150	2	8	22.45
350	725	200	2	8	23.78
400	775	50	3	10	25.11
450	825	100	3	10	26.44
500	875	150	3	10	27.77
550	925	200	3	10	29.1
600	975	50	4	12	30.43
650	1025	100	4	12	31.76
700	1075	150	4	12	33.09
750	1125	200	4	12	34.42
800	1175	50	5	14	35.75
850	1225	100	5	14	37.08
900	1275	150	5	14	38.41
950	1325	200	5	14	39.74
1000	1375	50	6	16	41.07
1050	1425	100	6	16	42.41
1100	1475	150	6	16	43.73
1150	1525	200	6	16	45.06
1200	1575	50	7	18	46.39
1250	1625	100	7	18	47.72

AC motor output		W	750	
Drive			Ballscrew C7(normal)	
Lead		mm	10	25
Rated RPM		RPM	3000	3000
Max linear speed*		mm/sec	500	1250
Rated thrust		N	1050	420
Repeatability		mm	±0.02	
Effective stroke		mm	150~1250	
Max load (H)		kg	239	95
Rated dynamic load**	Fyd	N	50	50
	Fzd	N	2390	950
	Mxd	N-m	154	178
	Myd	N-m	266	302
	Mzd	N-m	41	52
Permitted load condition***	$\frac{Fy}{Fyd}+\frac{Fz}{Fzd}+\frac{Mx}{Mxd}+\frac{My}{Myd}+\frac{Mz}{Mzd}\leq 1$ Fy, Fz, Mx, My, Mz are working loads			

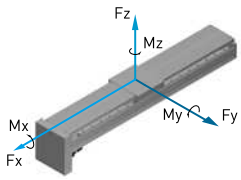

* Vibration might occur when the effective stroke is longer than 800mm.
The maximum speed should be decreased by 15% for every 100mm of increased stroke.
**The load condition is based on 10,000km operation
***For horizontal application only. If used in special condition, please contact HIWIN.

Model Number for KA200-FI

KA200	-25	P	-1250	A	FI	U	S1	M
Model	Lead	Precision Grade	Effective Stroke	Slider Type	Motor Flange	Cover	Limit Switch	Motor
	10mm 25mm	C: Normal P: Precision		A: Standard	FI: Internal	U: Without Cover None : Standard Cover	S1: OMRON SX671 S2: OMRON SX674 S3: SUNX GX-F12A S4: SUNX GX-F12A-P None: Without Sensor	M: Supplied With Motor None: Without Motor

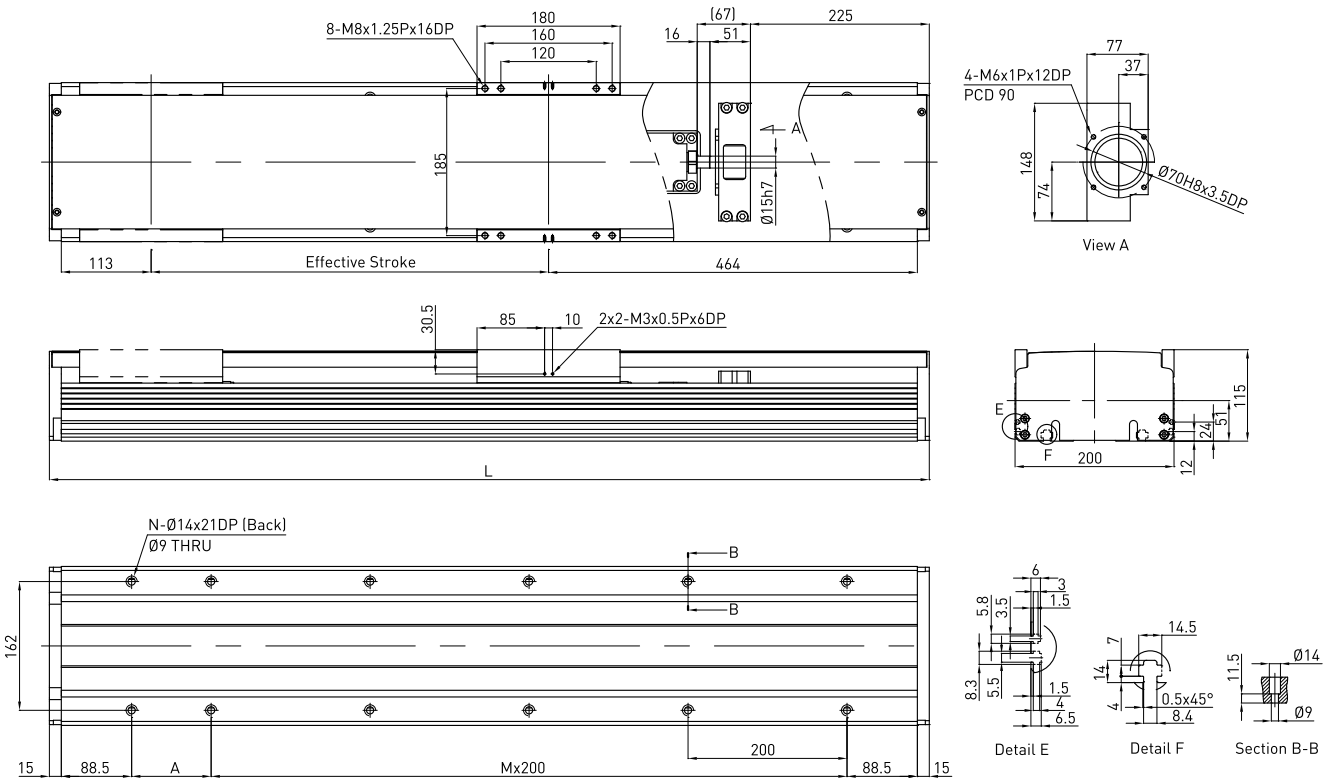

Effective stroke (mm)	L	A	M	N	Weight (kg)
150	757	150	2	8	19.83
200	807	200	2	8	21.32
250	857	50	3	10	22.82
300	907	100	3	10	24.31
350	957	150	3	10	25.81
400	1007	200	3	10	27.3
450	1057	50	4	12	28.79
500	1107	100	4	12	30.29
550	1157	150	4	12	31.78
600	1207	200	4	12	33.27
650	1257	50	5	14	34.77
700	1307	100	5	14	36.26
750	1357	150	5	14	37.76
800	1407	200	5	14	39.25
850	1457	50	6	16	40.74
900	1507	100	6	16	42.24
950	1557	150	6	16	43.73
1000	1607	200	6	16	45.22
1050	1657	50	7	18	46.73
1100	1707	100	7	18	48.21
1150	1757	150	7	18	49.7
1200	1807	200	7	18	51.2
1250	1857	50	8	19	52.69

AC motor output		W	750	
Drive			Ballscrew C7(normal)	
Lead		mm	10	25
Rated RPM		RPM	3000	3000
Max linear speed*		mm/sec	500	1250
Rated thrust		N	1050	420
Repeatability		mm	±0.02	
Effective stroke		mm	150~1250	
Max load (H)		kg	239	95
Rated dynamic load**	Fyd	N	50	50
	Fzd	N	2390	950
	Mxd	N-m	154	178
	Myd	N-m	266	302
	Mzd	N-m	41	52
Permitted load condition***	$\frac{Fy}{Fyd}+\frac{Fz}{Fzd}+\frac{Mx}{Mxd}+\frac{My}{Myd}+\frac{Mz}{Mzd}\leq 1$ Fy, Fz, Mx, My, Mz are working loads			

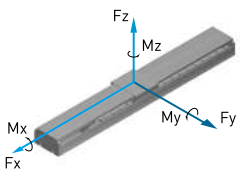

* Vibration might occur when the effective stroke is longer than 800mm.
The maximum speed should be decreased by 15% for every 100mm of increased stroke.
**The load condition is based on 10,000km operation
***For horizontal application only. If used in special condition, please contact HIWIN.

Model Number for KA200-FL

KA200	-25	P	-1250	A	FL	U	S1	M
Model	Lead	Precision Grade	Effective Stroke	Slider Type	Motor Flange	Cover	Limit Switch	Motor
	10mm 25mm	C: Normal P: Precision		A: Standard	FL: Left	U: Without Cover None : Standard Cover	S1: OMRON SX671 S2: OMRON SX674 S3: SUNX GX-F12A S4: SUNX GX-F12A-P None: Without Sensor	M: Supplied With Motor None: Without Motor

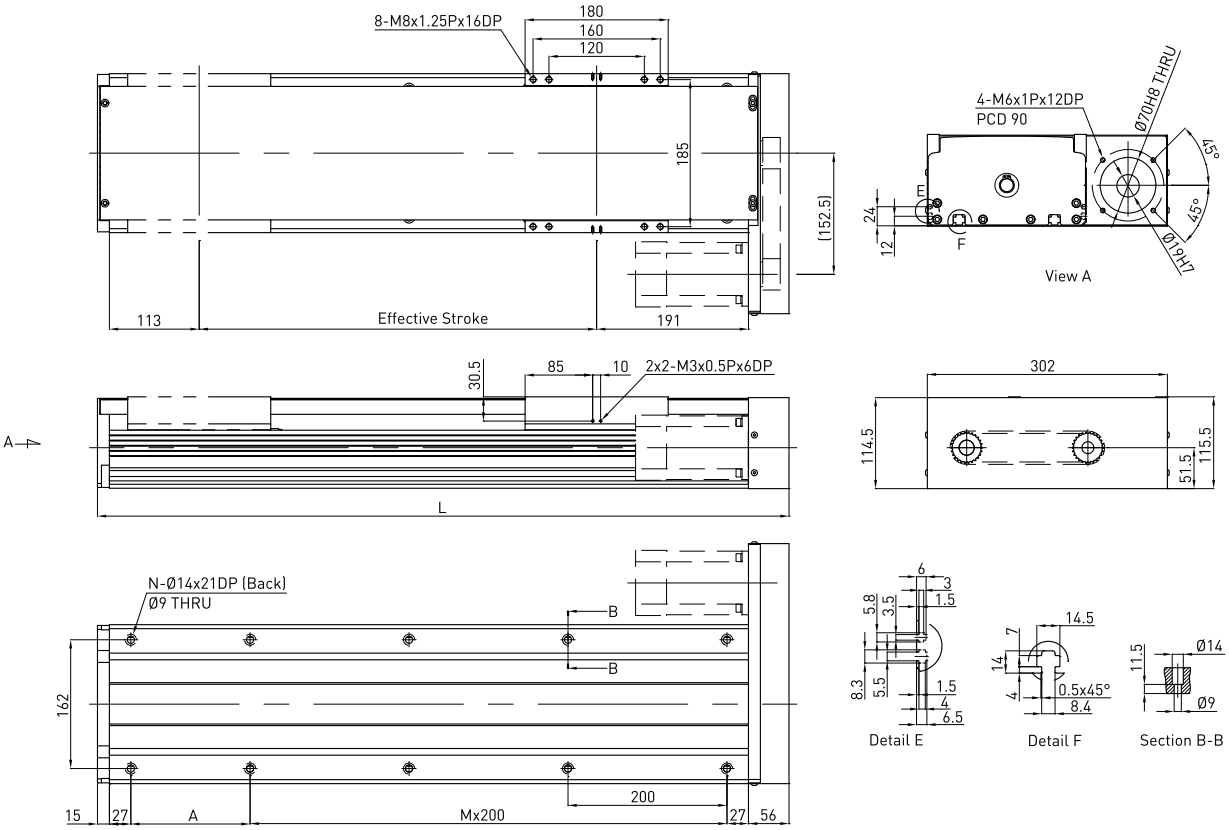

Effective stroke (mm)	L	A	M	N	Weight (kg)
150	525	200	1	6	18.46
200	575	50	2	8	19.79
250	625	100	2	8	21.12
300	675	150	2	8	22.45
350	725	200	2	8	23.78
400	775	50	3	10	25.11
450	825	100	3	10	26.44
500	875	150	3	10	27.77
550	925	200	3	10	29.1
600	975	50	4	12	30.43
650	1025	100	4	12	31.76
700	1075	150	4	12	33.09
750	1125	200	4	12	34.42
800	1175	50	5	14	35.75
850	1225	100	5	14	37.08
900	1275	150	5	14	38.41
950	1325	200	5	14	39.74
1000	1375	50	6	16	41.07
1050	1425	100	6	16	42.41
1100	1475	150	6	16	43.73
1150	1525	200	6	16	45.06
1200	1575	50	7	18	46.39
1250	1625	100	7	18	47.72

AC motor output		W	750	
Drive			Ballscrew C7(normal)	
Lead		mm	10	25
Rated RPM		RPM	3000	3000
Max linear speed*		mm/sec	500	1250
Rated thrust		N	1050	420
Repeatability		mm	±0.02	
Effective stroke		mm	150~1250	
Max load (H)		kg	239	95
Rated dynamic load**	Fyd	N	50	50
	Fzd	N	2390	950
	Mxd	N-m	154	178
	Myd	N-m	266	302
	Mzd	N-m	41	52
Permitted load condition***	$\frac{Fy}{Fyd}+\frac{Fz}{Fzd}+\frac{Mx}{Mxd}+\frac{My}{Myd}+\frac{Mz}{Mzd}\leq 1$ Fy, Fz, Mx, My, Mz are working loads			

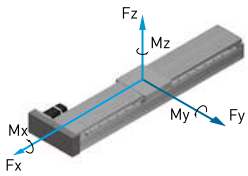

* Vibration might occur when the effective stroke is longer than 800mm.
The maximum speed should be decreased by 15% for every 100mm of increased stroke.
**The load condition is based on 10,000km operation
***For horizontal application only. If used in special condition, please contact HIWIN.

Model Number for KA200-FR

KA200	-25	P	-1250	A	FR	U	S1	M
Model	Lead	Precision Grade	Effective Stroke	Slider Type	Motor Flange	Cover	Limit Switch	Motor
	10mm 25mm	C: Normal P: Precision		A: Standard	FR: Right	U: Without Cover None : Standard Cover	S1: OMRON SX671 S2: OMRON SX674 S3: SUNX GX-F12A S4: SUNX GX-F12A-P None: Without Sensor	M: Supplied With Motor None: Without Motor

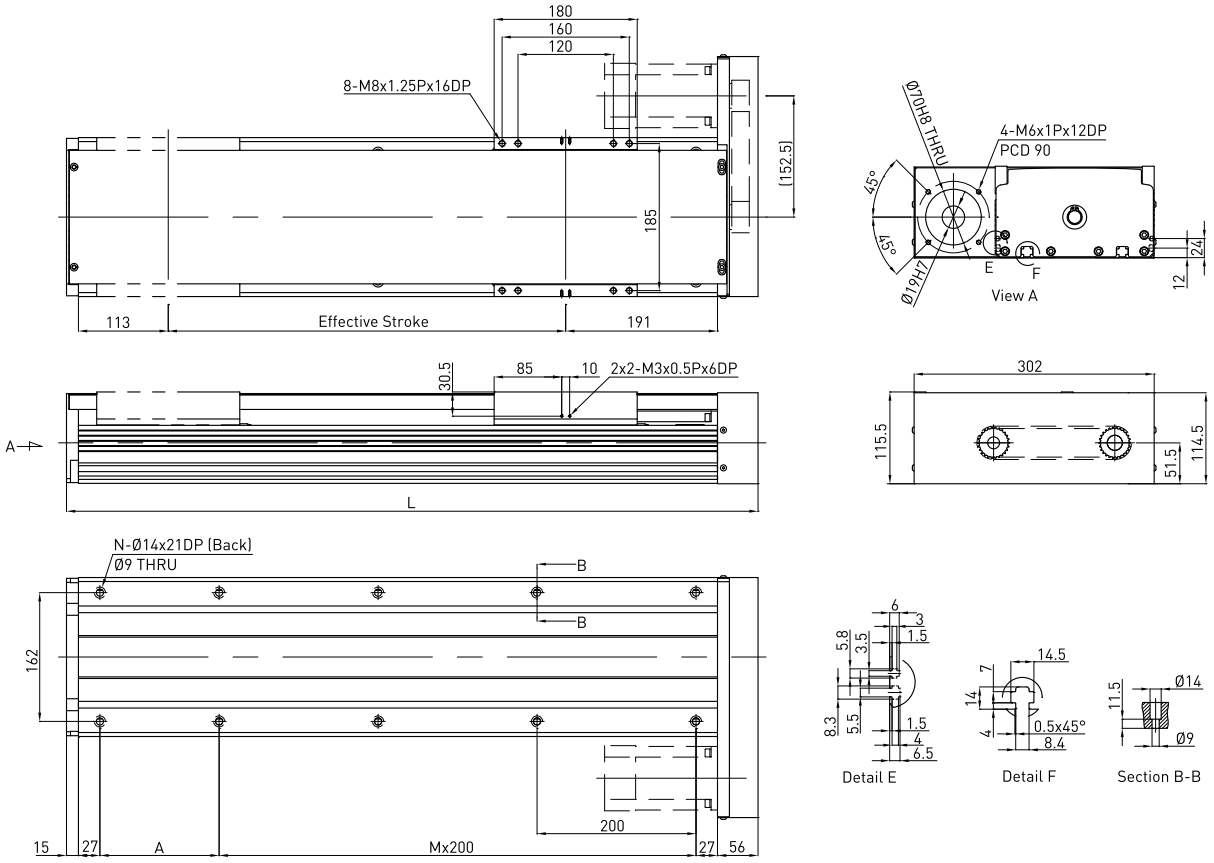

Effective stroke (mm)	L	A	M	N	Weight (kg)
150	525	200	1	6	18.46
200	575	50	2	8	19.79
250	625	100	2	8	21.12
300	675	150	2	8	22.45
350	725	200	2	8	23.78
400	775	50	3	10	25.11
450	825	100	3	10	26.44
500	875	150	3	10	27.77
550	925	200	3	10	29.1
600	975	50	4	12	30.43
650	1025	100	4	12	31.76
700	1075	150	4	12	33.09
750	1125	200	4	12	34.42
800	1175	50	5	14	35.75
850	1225	100	5	14	37.08
900	1275	150	5	14	38.41
950	1325	200	5	14	39.74
1000	1375	50	6	16	41.07
1050	1425	100	6	16	42.41
1100	1475	150	6	16	43.73
1150	1525	200	6	16	45.06
1200	1575	50	7	18	46.39
1250	1625	100	7	18	47.72

AC motor output		W	750	
Drive			Ballscrew C7(normal)	
Lead		mm	10	25
Rated RPM		RPM	3000	3000
Max linear speed*		mm/sec	500	1250
Rated thrust		N	1050	420
Repeatability		mm	±0.02	
Effective stroke		mm	150~1250	
Max load (H)		kg	239	95
Rated dynamic load**	Fyd	N	50	50
	Fzd	N	2390	950
	Mxd	N-m	154	178
	Myd	N-m	266	302
	Mzd	N-m	41	52
Permitted load condition**	$\frac{Fy}{Fyd}+\frac{Fz}{Fzd}+\frac{Mx}{Mxd}+\frac{My}{Myd}+\frac{Mz}{Mzd}\leq 1$ Fy, Fz, Mx, My, Mz are working loads			

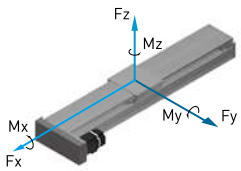

* Vibration might occur when the effective stroke is longer than 800mm.
The maximum speed should be decreased by 15% for every 100mm of increased stroke.
**The load condition is based on 10,000km operation
***For horizontal application only. If used in special condition, please contact HIWIN.