Model Number for KS180 -FI

KS180	-20	P	-1200	A	FI	S2	M
Model	Lead	Precision Grade	Effective Stroke	Slider Type	Motor Flange	Limit Switch	Motor
	10mm 20mm	P: Precision C: Normal		A: Standard	FI: Internal	S2: OMRON SX674 None: Without Sensor	M: Supplied With Motor None: Without Motor

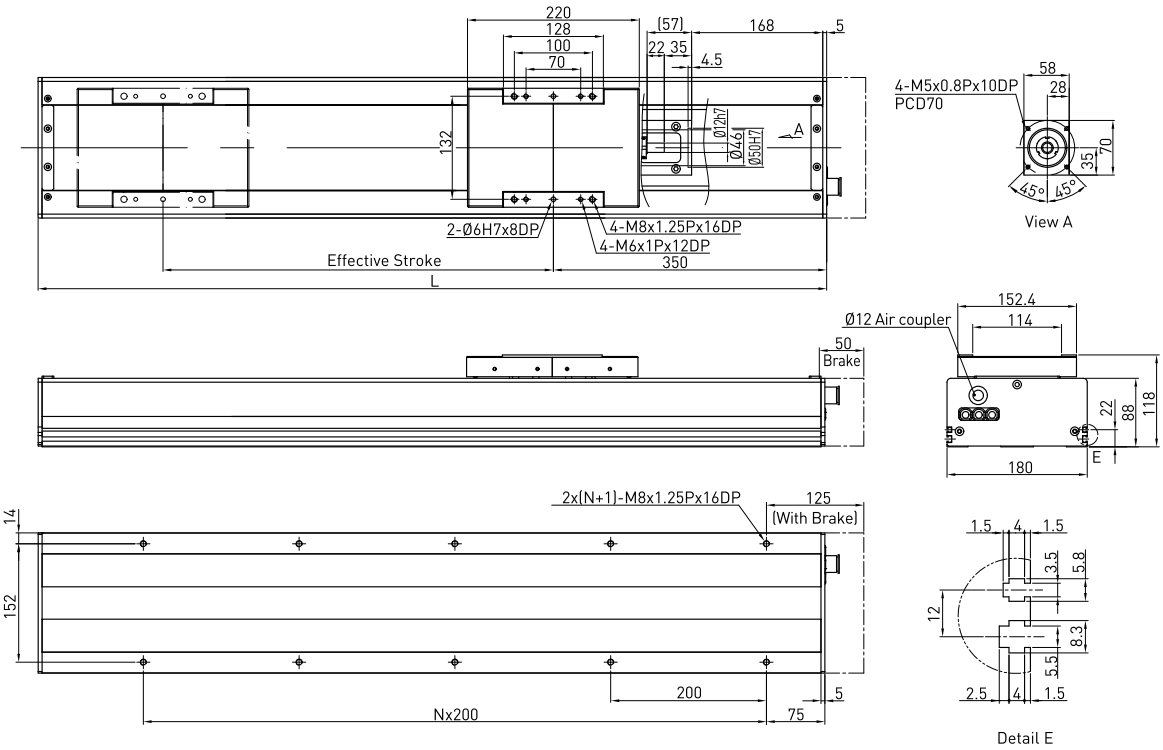

Effective stroke (mm)	L	N	Weight (kg)
200	710	3	16.5
300	810	3	18.1
400	910	4	19.7
500	1010	4	21.3
600	1110	5	22.9
700	1210	5	24.4
800	1310	6	26
900	1410	6	27.6
1000	1510	7	29.2
1100	1610	7	30.8
1200	1710	8	32.3

AC motor output			W	400	
Drive				Ballscrew C7(normal)	
Lead			mm	10	20
Rated RPM			RPM	3000	3000
Max linear speed*			mm/sec	500	1000
Rated thrust			N	560	280
Repeatability			mm	±0.02	
Effective stroke			mm	150~1250	
Max load (H)			kg	95	46
Rated dynamic load**	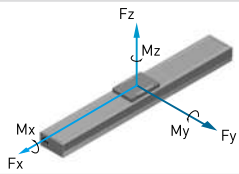	Fyd	N	50	50
		Fzd	N	950	460
		Mxd	N-m	70	80
		Myd	N-m	80	90
		Mzd	N-m	22	23
Permitted load condition***	$\frac{Fy}{Fyd}+\frac{Fz}{Fzd}+\frac{Mx}{Mxd}+\frac{My}{Myd}+\frac{Mz}{Mzd}\leq 1$ Fy, Fz, Mx, My, Mz are working loads				

* Vibration might occur when the effective stroke is longer than 700mm.
The maximum speed should be decreased by 15% for every 100mm of increased stroke.
** The load condition is based on 10,000km operation.
*** If used on the vertical axis or in a special condition, please contact HIWIN.

Model Number for KS180-FL

KS180	-20	P	-1200	A	FL	S2	M
Model	Lead	Precision Grade	Effective Stroke	Slider Type	Motor Flange	Limit Switch	Motor
	10mm 20mm	P: Precision C: Normal		A: Standard	FL: Left	S2: OMRON SX674 None: Without Sensor	M: Supplied With Motor None: Without Motor

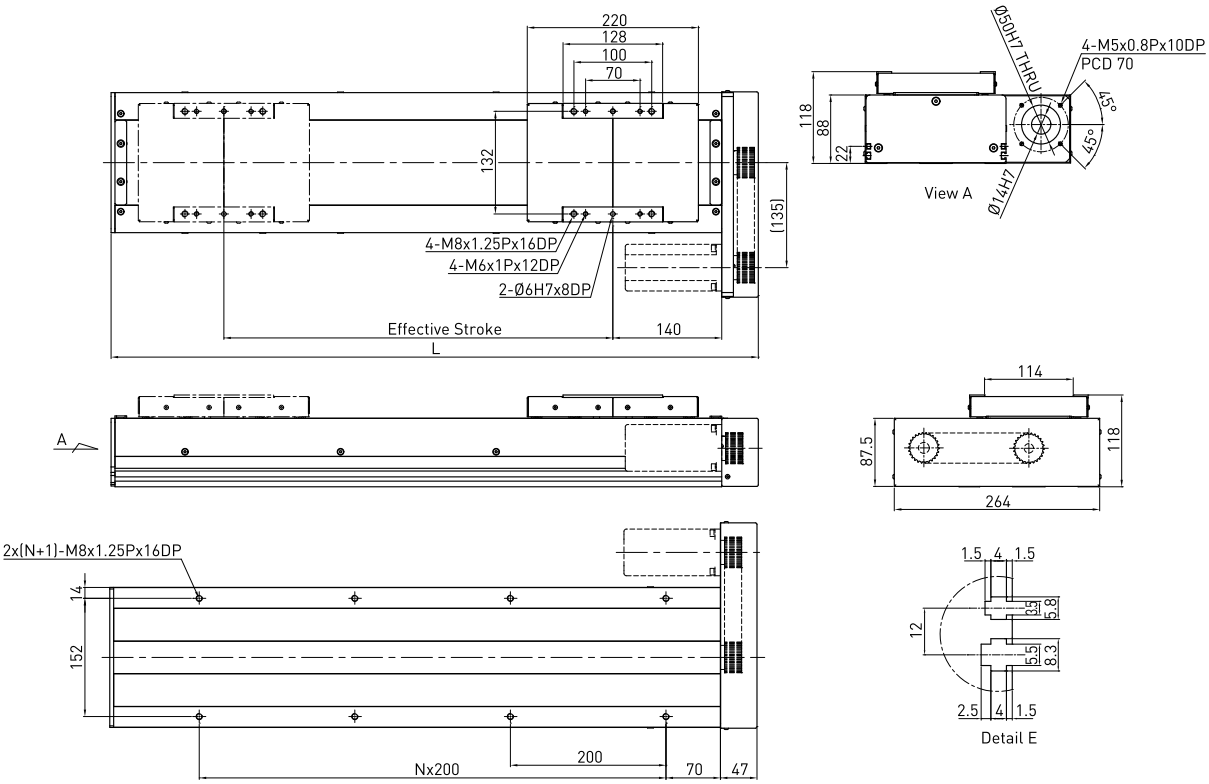

Effective stroke (mm)	L	N	Weight (kg)
200	532	1	11.3
300	632	2	12.3
400	732	2	13.3
500	832	3	14.3
600	932	3	15.3
700	1032	4	16.3
800	1132	4	17.3
900	1232	5	18.3
1000	1332	5	19.3
1100	1432	6	20.3
1200	1532	6	21.3

AC motor output		W	400	
Drive			Ballscrew C7(normal)	
Lead		mm	10	20
Rated RPM		RPM	3000	3000
Max linear speed*		mm/sec	500	1000
Rated thrust		N	560	280
Repeatability		mm	±0.02	
Effective stroke		mm	150~1250	
Max load (H)		kg	95	46
Rated dynamic load**	Fyd	N	50	50
	Fzd	N	950	460
	Mxd	N-m	70	80
	Myd	N-m	80	90
	Mzd	N-m	22	23
Permitted load condition***	$\frac{Fy}{Fyd}+\frac{Fz}{Fzd}+\frac{Mx}{Mxd}+\frac{My}{Myd}+\frac{Mz}{Mzd}\leq 1$ Fy, Fz, Mx, My, Mz are working loads			

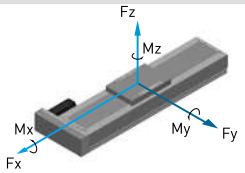

* Vibration might occur when the effective stroke is longer than 700mm.
The maximum speed should be decreased by 15% for every 100mm of increased stroke.
** The load condition is based on 10,000km operation.
*** If used on the vertical axis or in a special condition, please contact HIWIN.

Model Number for KS180-FR

KS180	-20	P	-1200	A	FR	S2	M
Model	Lead	Precision Grade	Effective Stroke	Slider Type	Motor Flange	Limit Switch	Motor
	10mm 20mm	P: Precision C: Normal		A: Standard	FR: Right	S2: OMRON SX674 None: Without Sensor	M: Supplied With Motor None: Without Motor

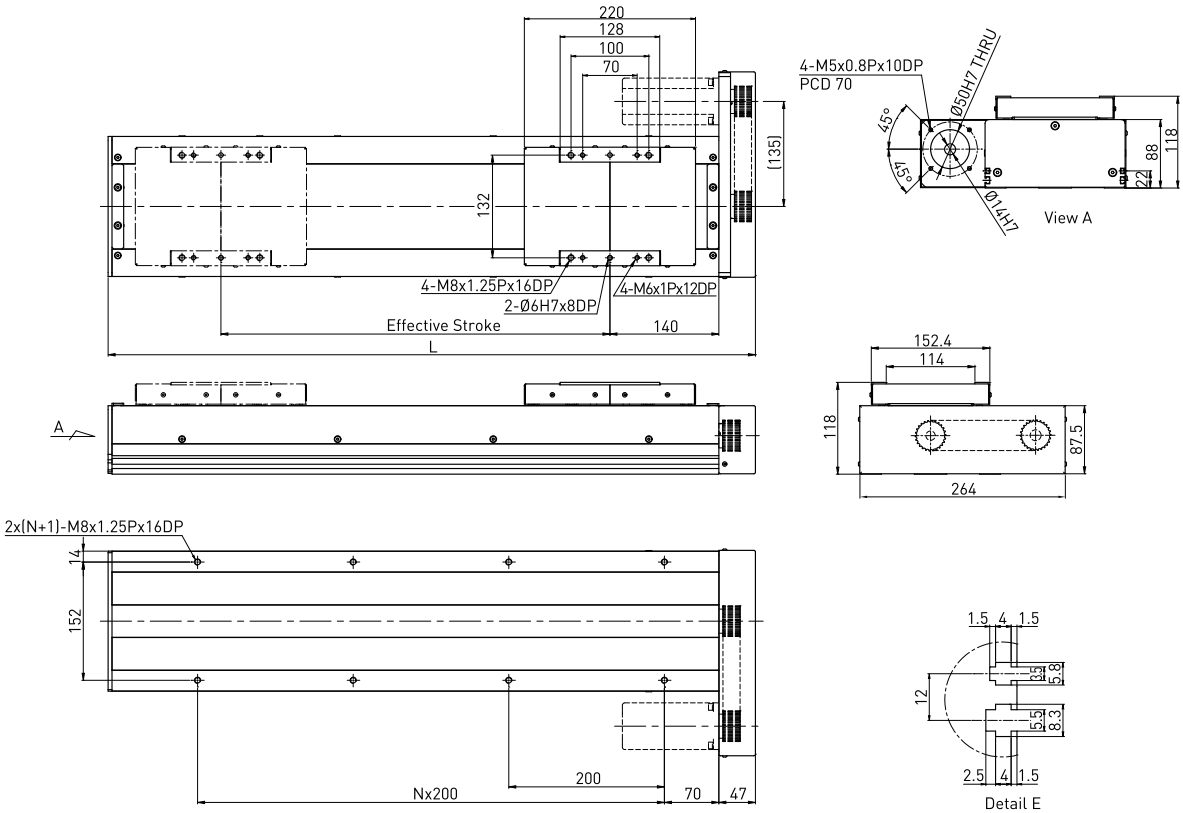

Effective stroke (mm)	L	N	Weight (kg)
200	532	1	11.3
300	632	2	12.3
400	732	2	13.3
500	832	3	14.3
600	932	3	15.3
700	1032	4	16.3
800	1132	4	17.3
900	1232	5	18.3
1000	1332	5	19.3
1100	1432	6	20.3
1200	1532	6	21.3

AC motor output		W	400	
Drive			Ballscrew C7(normal)	
Lead		mm	10	20
Rated RPM		RPM	3000	3000
Max linear speed*		mm/sec	500	1000
Rated thrust		N	560	280
Repeatability		mm	±0.02	
Effective stroke		mm	150~1250	
Max load (H)		kg	95	46
Rated dynamic load**	Fyd	N	50	50
	Fzd	N	950	460
	Mxd	N-m	70	80
	Myd	N-m	80	90
	Mzd	N-m	22	23
Permitted load condition***	$\frac{Fy}{Fyd}+\frac{Fz}{Fzd}+\frac{Mx}{Mxd}+\frac{My}{Myd}+\frac{Mz}{Mzd}\leq 1$ Fy, Fz, Mx, My, Mz are working loads			

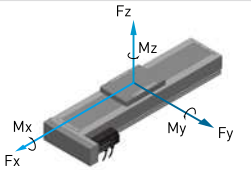

* Vibration might occur when the effective stroke is longer than 700mm.
The maximum speed should be decreased by 15% for every 100mm of increased stroke.
** The load condition is based on 10,000km operation.
*** If used on the vertical axis or in a special condition, please contact HIWIN.

Model Number for KS180B-FL

KS180	B	-120	C	-3000	A	FL	S2	M
Model	Timing Belt	Pulley Perimeter	Precision Grade	Effective Stroke	Slider Type	Motor Flange	Limit Switch	Motor
			C: Normal		A: Standard	FL: Left	S2: OMRON SX674 None: Without Sensor	M: Supplied With Motor None: Without Motor

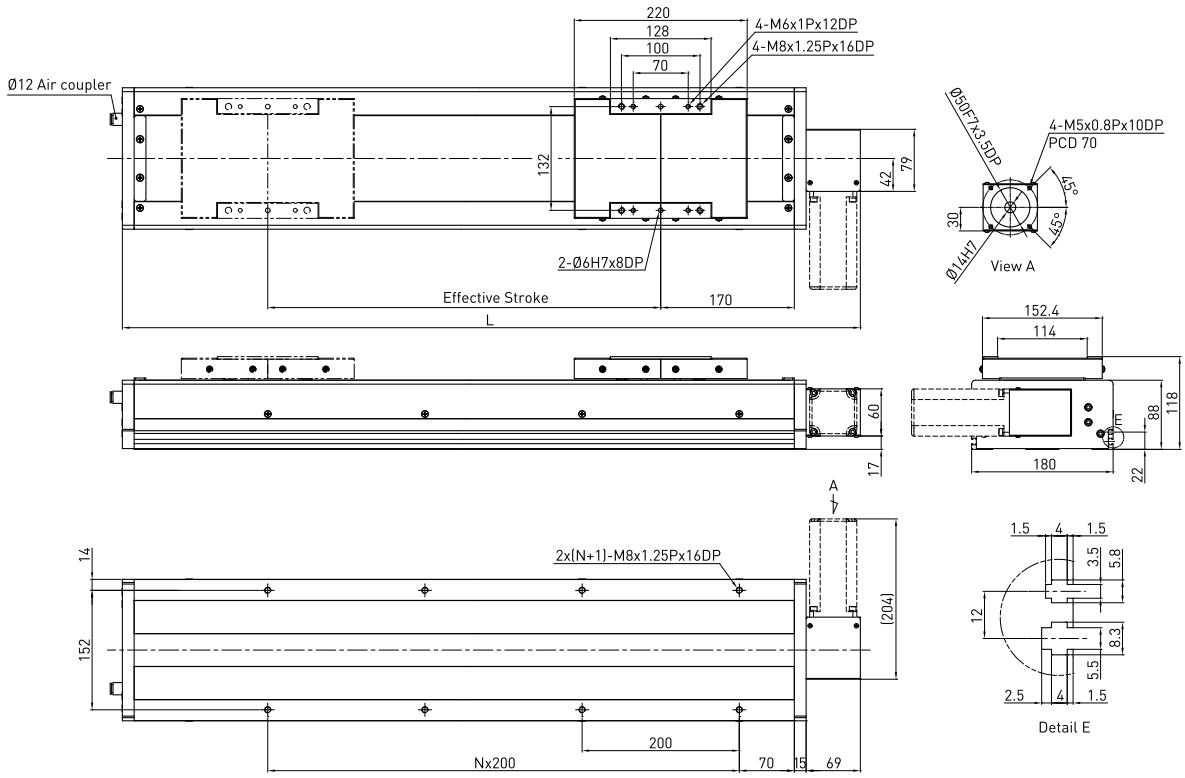

Effective stroke (mm)	L	N	Weight (kg)
200	639	2	14.2
400	839	3	17.0
600	1039	4	19.8
800	1239	5	22.6
1000	1439	6	25.4
1200	1639	7	28.2
1400	1839	8	31.0
1600	2039	9	33.8
1800	2239	10	36.6
2000	2439	11	39.4
2200	2639	12	42.2
2400	2839	13	45.0
2600	3039	14	47.8
2800	3239	15	50.6
3000	3439	16	53.4

AC motor output		W	400
Drive			Timing Belt
Pulley Perimeter		mm	120
Pulley RPM		RPM	900
Max linear speed		mm/sec	1800
Rated thrust		N	133
Repeatability		mm	±0.1
Effective stroke		mm	200~3000
Max load (H)		kg	30
Rated dynamic load*	Fyd	N	50
	Fzd	N	300
	Mxd	N-m	82
	Myd	N-m	92
	Mzd	N-m	23

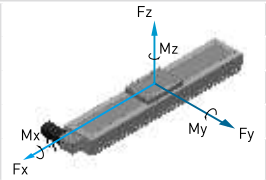

Permitted load condition**

$$\frac{Fy}{Fyd}+\frac{Fz}{Fzd}+\frac{Mx}{Mxd}+\frac{My}{Myd}+\frac{Mz}{Mzd}\leq 1$$

Fy, Fz, Mx, My, Mz are working loads

*The load condition is based on 10,000km operation.
**For horizontal application only. If used in special condition, please contact HIWIN.

Model Number for KS180B-FR

KS180	B	-120	C	-3000	A	FR	S2	M
Model	Timing Belt	Pulley Perimeter	Precision Grade	Effective Stroke	Slider Type	Motor Flange	Limit Switch	Motor
			C: Normal		A: Standard	FR: Right	S2: OMRON SX674 None: Without Sensor	M: Supplied With Motor None: Without Motor

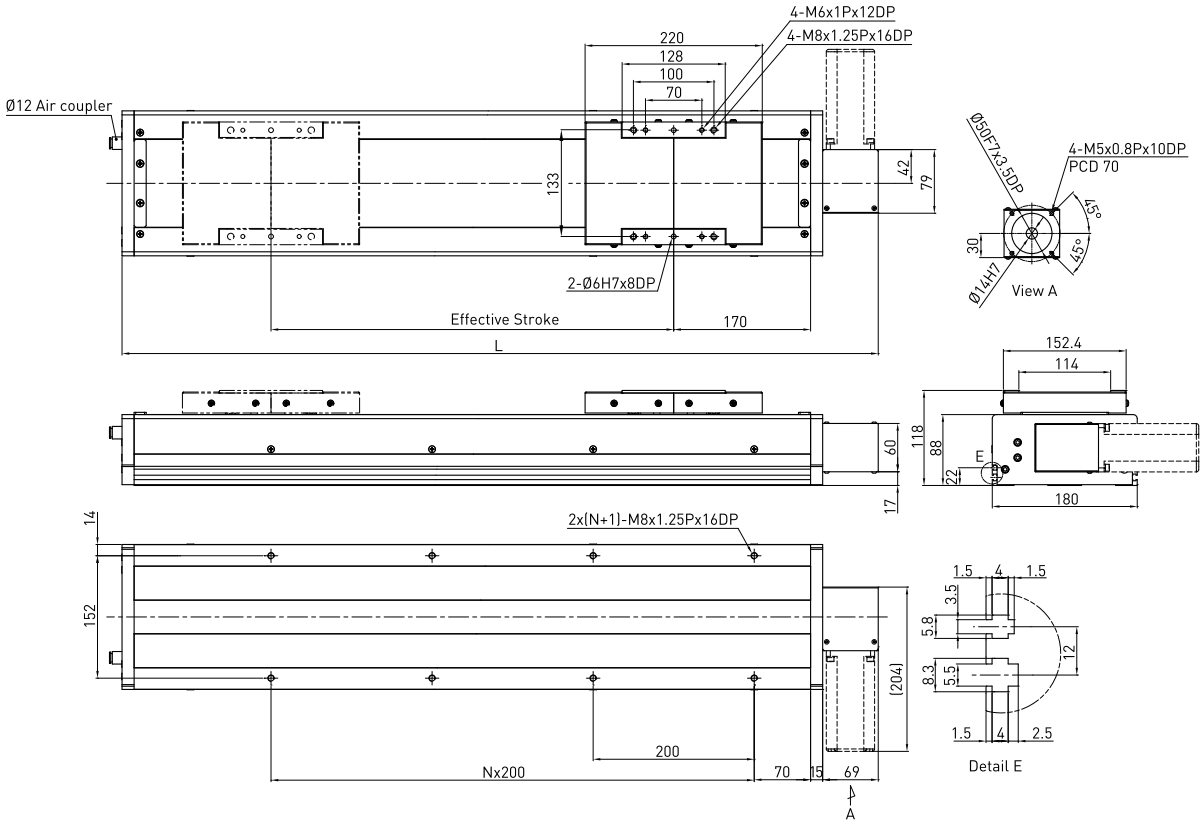

Effective stroke (mm)	L	N	Weight (kg)
200	639	2	14.2
400	839	3	17.0
600	1039	4	19.8
800	1239	5	22.6
1000	1439	6	25.4
1200	1639	7	28.2
1400	1839	8	31.0
1600	2039	9	33.8
1800	2239	10	36.6
2000	2439	11	39.4
2200	2639	12	42.2
2400	2839	13	45.0
2600	3039	14	47.8
2800	3239	15	50.6
3000	3439	16	53.4

AC motor output		W	400
Drive			Timing Belt
Pulley Perimeter		mm	120
Pulley RPM		RPM	900
Max linear speed		mm/sec	1800
Rated thrust		N	133
Repeatability		mm	±0.1
Effective stroke		mm	200~3000
Max load (H)		kg	30
Rated dynamic load*	Fyd	N	50
	Fzd	N	300
	Mxd	N-m	82
	Myd	N-m	92
	Mzd	N-m	23
Permitted load condition**	$\frac{Fy}{Fyd}+\frac{Fz}{Fzd}+\frac{Mx}{Mxd}+\frac{My}{Myd}+\frac{Mz}{Mzd}\leq 1$ Fy, Fz, Mx, My, Mz are working loads		

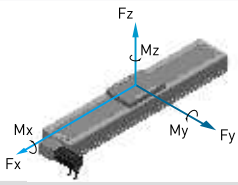

*The load condition is based on 10,000km operation.
**For horizontal application only. If used in special condition, please contact HIWIN.